MB-8.7

SPECIFICATIONS - ENGLISH (IN-OZ and FT-LB)

OUTSIDE DIAMETER:	8.70 inches	8.70 inches
MAX. TORQUE AT ZERO RPM:	2,074 in·oz	10.80 ft·lb
MAX. TORQUE AT MAX RPM:	7,676 in·oz	39.98 ft·lb
MAX. RPM:	6,000 rev/min	6,000 rev/min
MIN. TORQUE AT MAX RPM*:	500 in·oz	2.60 ft·lb
MAX. POWER @ MAX. RPM FOR 15 SEC.:	23.08 hp	23.08 hp
MAX. CONTINUOUS POWER @ MAX. RPM:	6.59 hp	6.59 hp

*This torque is due to air drag and bearing friction; current and cogging at zero level.

MAX. COIL CURRENT (Amps)	RESISTANCE ±10@25°C (ohms)	MAX. VOLTAGE (Vdc)	+24Vdc SUPPLY CURRENT (Amps)	-24Vdc SUPPLY CURRENT (Amps)	ROTOR INERTIA (in oz s²)	BRAKE WEIGHT (lbs.)
5.0	2.3	24	5.0	NA	2.8	63.4

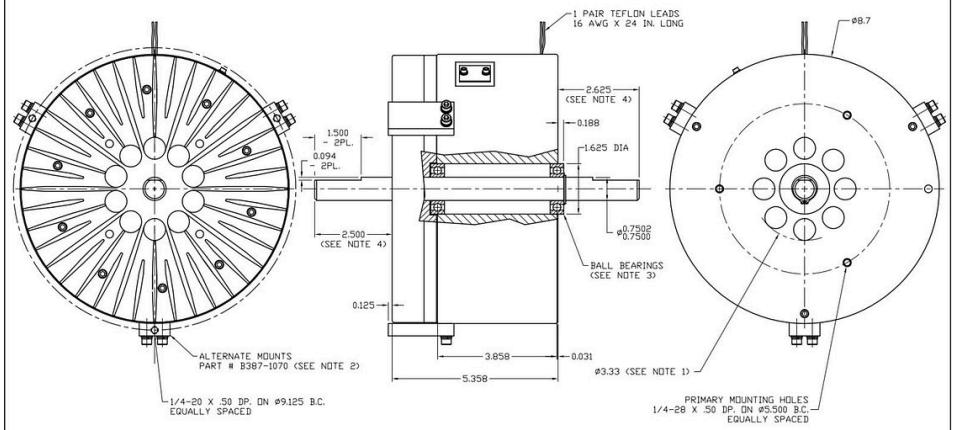

NOTES:
1. A 3.33 DIAMETER HOLE IS REQUIRED IN THE MOUNTING PLATE FOR VENTILATION PURPOSES. IF THE BRAKE IS MOUNTED ON A FLAT SURFACE IT SHOULD BE SPACED .25 IN FROM THE SURFACE.
2. PART # B387-1070 IS AN OPTIONAL ITEM (3 PCS. REQ.) AND SHOULD BE ORDERED SEPERATELY.
3. .750 BORE, ABEC 5, FAFNIR MSBK00 OR EQUIVALENT.
4. SHAFT DIAMETER: .7502/.7500. MATERIAL: 17-4 STAINLESS, RC38, 175,000 PSI.

UNLESS OTHERWISE SPECIFIED
1. FABRICATION MUST BE MADE TO ASME Y14.5-1973
2. SURFACE ROUGHNESS PER ANSI B46.1-1978
3. LINEAR DIMENSIONS IN INCHES
4. LINEAR TOLERANCE
DECIMALS: .XX ± .02, .XXX ± .005
5. ANGULAR TOLERANCES
ANGLES ± 1/2°
6. MACHINE SCRAPS
.XXX FOR ALL FLANGE AND/OR DIAMETERS WITHIN .005 FOR DIAMETERS WITHOUT FLANGES / .38
7. BREAK EDGES .005 - .015
8. FILLETS MAXIMUM

THE INFORMATION DISCLOSED HEREIN IS THE EXCLUSIVE PROPERTY OF MAGNETIC BRAKE SYSTEMS 4725 CALLE QUETZAL, CAMARILLO, CA 93012 OR MAY CONTAIN PROPRIETARY RIGHTS OF OTHERS AND IS NOT TO BE USED OR DISCLOSED TO OTHERS WITHOUT THE WRITTEN CONSENT OF THE ABOVE.

BRAKE - MAGNETIC, MODEL MB-8.7 | SH 1 OF 1 | 387-0100

MB-8.7

SPECIFICATIONS - SI

OUTSIDE DIAMETER:	220.98 mm
MAX. TORQUE AT ZERO RPM:	14.65 N·m
MAX. TORQUE AT MAX RPM:	54.20 N·m
MAX. RPM:	628.32 rad/sec
MIN. TORQUE AT MAX RPM*:	3.53 N·m
MAX. POWER @ MAX. RPM FOR 15 SEC.:	17,214 watts
MAX. CONTINUOUS POWER @ MAX. RPM:	4,916 watts

*This torque is due to air drag and bearing friction; current and cogging at zero level.

MAX. COIL CURRENT (Amps)	RESISTANCE ±10%@25°C (ohms)	MAX. VOLTAGE (Vdc)	+24Vdc SUPPLY CURRENT (Amps)	-24Vdc SUPPLY CURRENT (Amps)	ROTOR INERTIA (kg cm²)	BRAKE WEIGHT (kg.)
5.0	2.3	24	5.0	NA	197.7	28.75

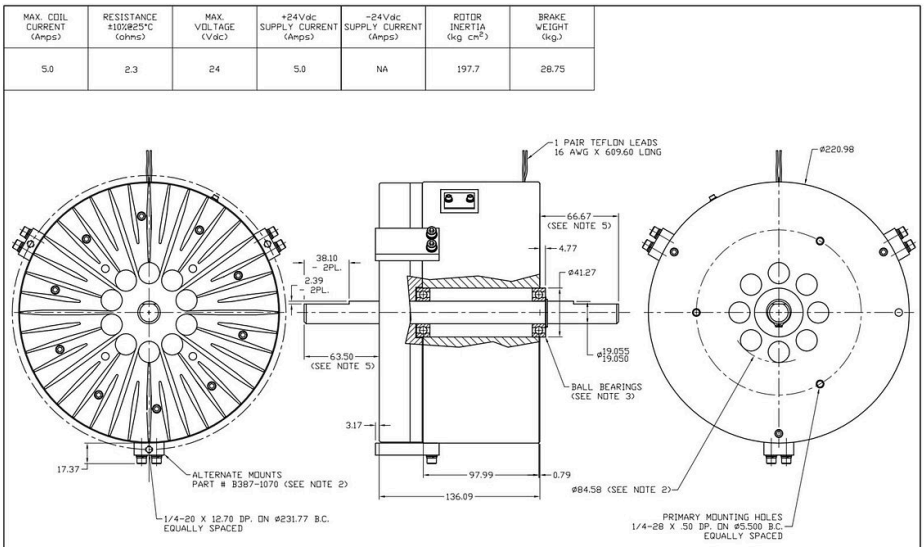

NOTES:
1. UNITS ARE IN MILLIMETERS.
2. A 84.58 DIAMETER HOLE IS REQUIRED IN THE MOUNTING PLATE FOR VENTILATION PURPOSES. IF THE BRAKE IS MOUNTED ON A FLAT SURFACE IT SHOULD BE SPACED 6.35 IN FROM THE SURFACE.
3. PART # B387-1070 IS AN OPTIONAL ITEM (3 PCS. REQ.) AND SHOULD BE ORDERED SEPERATELY.
4. 19.05 BORE, ABEC 5, FAFNIR MSBKDD OR EQUIVALENT.
5. SHAFT DIAMETER: 19.055/19.050. MATERIAL: 17-4 STAINLESS, RC38, 1,206.6 MPA.

UNLESS OTHERWISE SPECIFIED
1. DIMENSIONS ARE PER ANSI Y14.5-1973
2. SURFACE ROUGHNESS PER ANSI B46.1-1978
3. LINEAR DIMENSIONS IN MILLIMETERS
4. LINEAR TOLERANCES:
.X ± .25 .XX ± .10 .XXX ± .005
5. ANGULAR TOLERANCES:
± 0.5° ± 30' ± 15'
6. MACHINED SURFACES:
3 AND 7 ALL PLANES .002-TMC
ALL OTHER MACHINED SURFACES
MAXIMUM SURFACE ROUGHNESS √ 32
7. BREAK EDGES .25 MILS.
8. FILLETS MAXIMUM

THE INFORMATION DISCLOSED HEREIN IS THE EXCLUSIVE PROPERTY OF MAGNETIC BRAKE SYSTEMS 4725 CALLE QUETZAL, CAMARILLO, CA 93012 OR MAY CONTAIN PROPRIETARY RIGHTS OF OTHERS AND IS NOT TO BE USED OR DISCLOSED TO OTHERS WITHOUT THE WRITTEN CONSENT OF THE ABOVE.

BRAKE - MAGNETIC,
MODEL MB-8.7 (METRIC)
SH 1 OF 1
387-0100

PERFORMANCE CURVES - STANDALONE MBS BRAKE

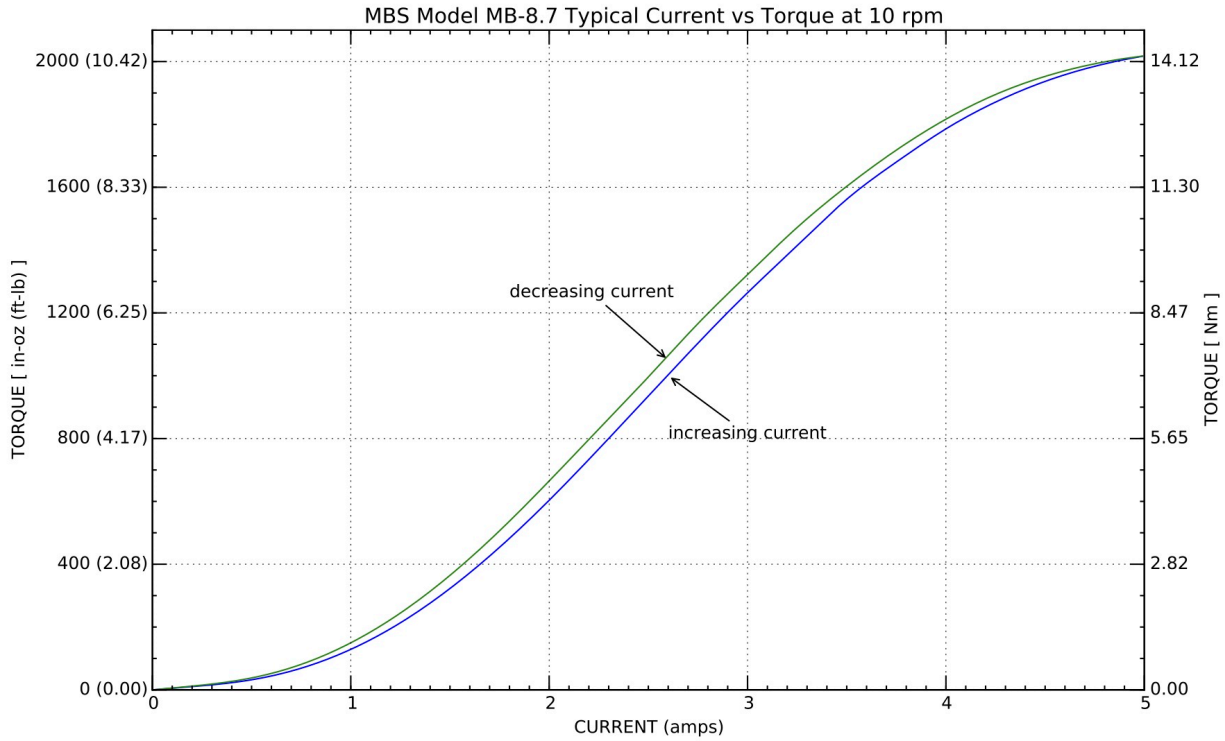

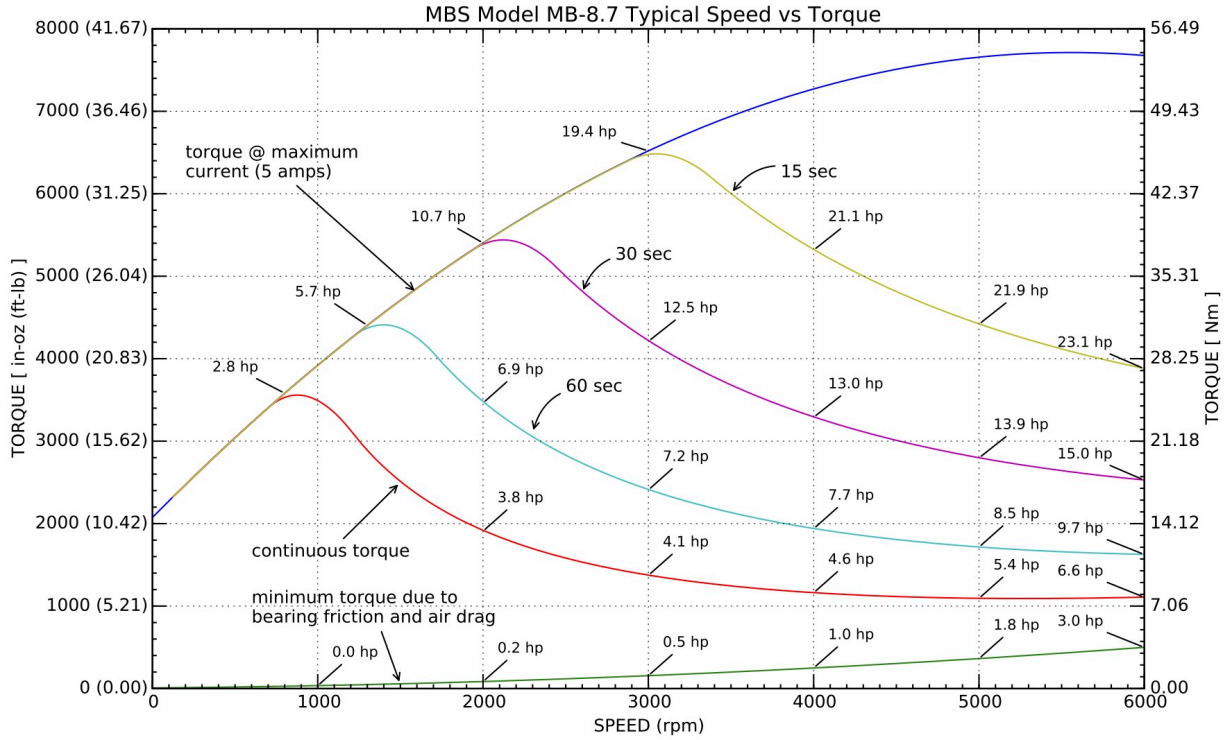

July 2018 - Magnetic Brake Systems - www.magbrakesystems.com - tel: +1 805-383-6903